BPS711401

71x14mm Anodized Treatment

ALUMINUM PROFILE

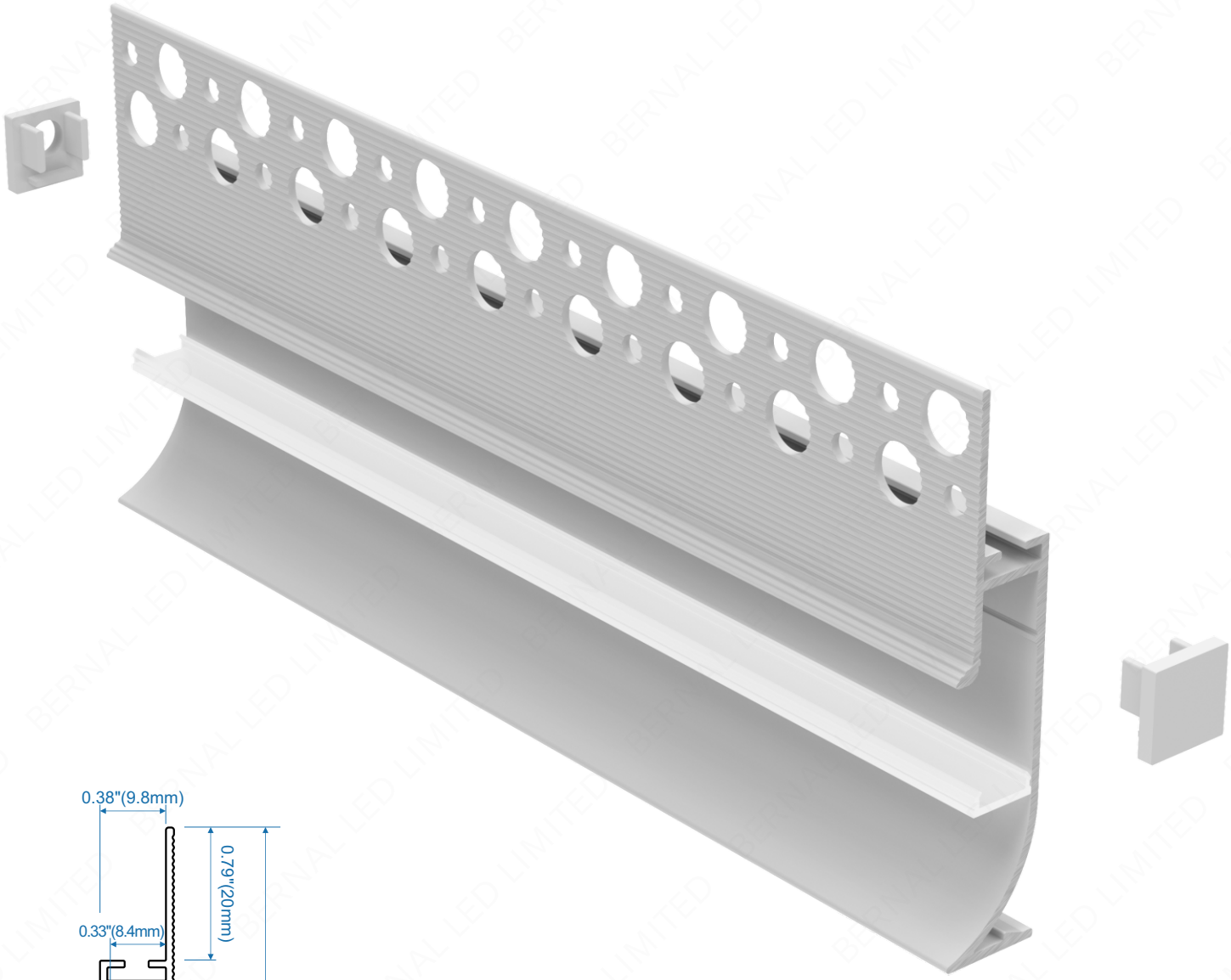

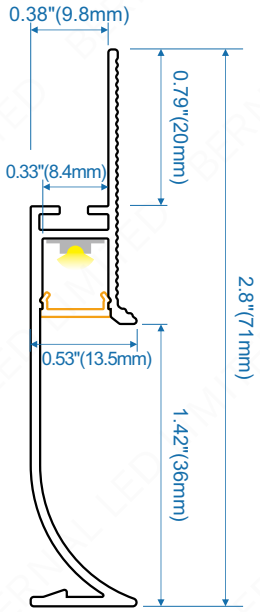

© 2025, BERNAL LED LIMITED. All rights reserved

ALUMINUM PROFILE

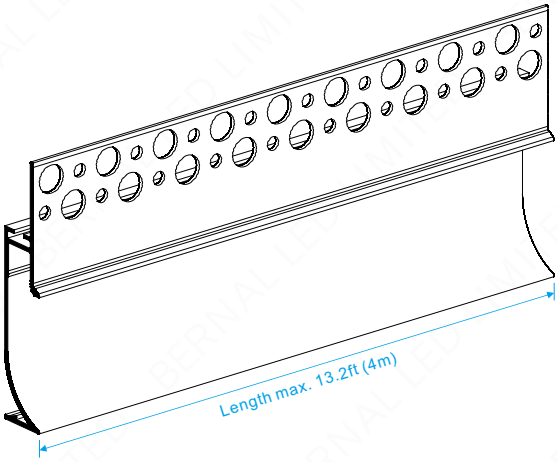

White Painted

Silver Anodized
* standard color

Black Anodized

- Using High Quality 6063-T5 Aluminum as a material
- High Standard of anodizing aluminum surface
- International Standard Anodized Silver Color
- Heat Sink and physical protection to the LEDs
- Suitable for Max. 8mm width LED flexible strips
- Available length 1m, 2m, 2.5m, 3m, 4m

DIFFUSER

The milky color diffusers are capable of transmitting a large spread of the LED light. It is able to give a uniform brightness and is used as a cover for LED lights to eliminate or reduce the light points of the LEDs.

Color	Milky
Material	PC
Working Temperature	-50℃ ~ 100℃
Light Transmission	86%
Coefficient Diffusion	Medium
Method of Assembly	Push in

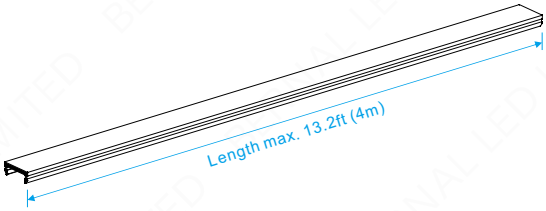

Color:
1.Transparent
2.Milky (opal)
* standard color
3.Black

www.bernal-led.com
© 2025, BERNAL LED LIMITED. All rights reserved

HOW TO INSTALL THE PROFILE?

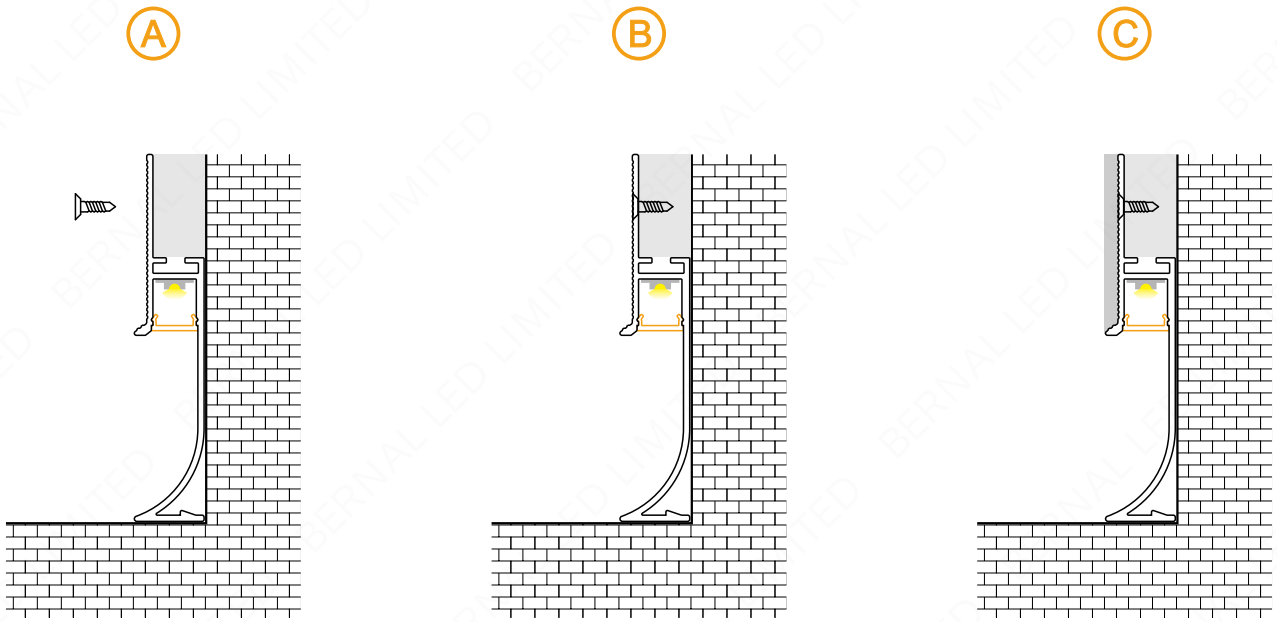

© 2025, BERNAL LED LIMITED. All rights reserved